Cambridge International Examinations
Cambridge International General Certificate of Secondary Education

CANDIDATE NAME	
CENTRE NUMBER	
CANDIDATE NUMBER	

PHYSICS **0625/41**

Paper 4 Theory (Extended) **May/June 2017**

1 hour 15 minutes

Candidates answer on the Question Paper.

No Additional Materials are required.

READ THESE INSTRUCTIONS FIRST

Write your Centre number, candidate number and name on all the work you hand in.
Write in dark blue or black pen.
You may use an HB pencil for any diagrams or graphs.
Do not use staples, paper clips, glue or correction fluid.
DO **NOT** WRITE IN ANY BARCODES.

Answer **all** questions.
Electronic calculators may be used.
You may lose marks if you do not show your working or if you do not use appropriate units.
Take the weight of 1 kg to be 10 N (acceleration of free fall = 10 m / s^2).

At the end of the examination, fasten all your work securely together.
The number of marks is given in brackets [ ] at the end of each question or part question.

The syllabus is approved for use in England, Wales and Northern Ireland as a Cambridge International Level 1/Level 2 Certificate.

This document consists of **16** printed pages.

DC (ST/JG) 129077/7
© UCLES 2017

CAMBRIDGE International Examinations

www.root19.com +91 - 9969 353 391

1 Fig. 1.1 is the speed-time graph for an ice skater.

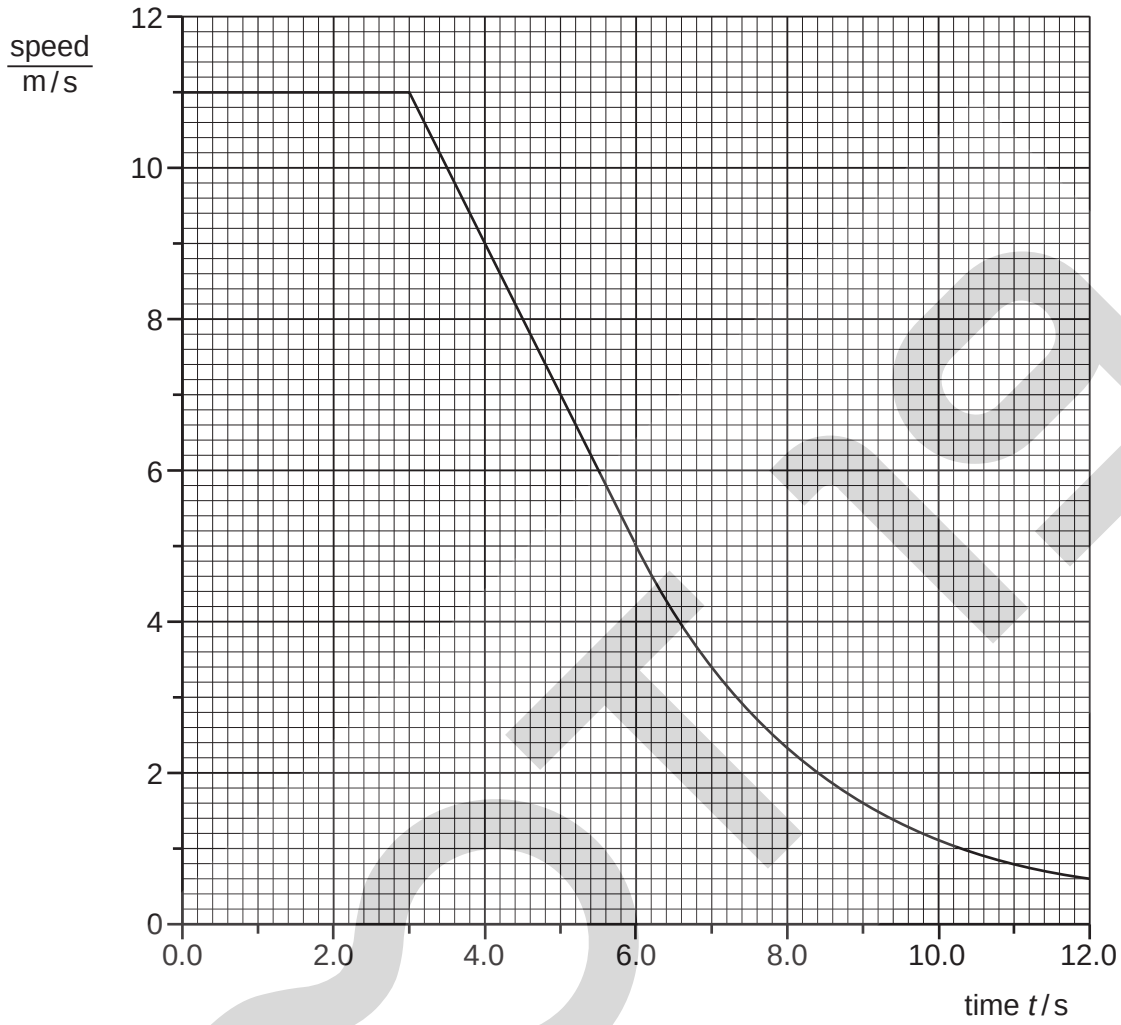

Fig. 1.1

(a) Explain what is meant by *deceleration*.

.....[1]

(b) Use Fig. 1.1 to determine

(i) the distance travelled between times $t = 3.0\,s$ and $t = 6.0\,s$,

distance = ...[2]

www.root19.com +91 - 9969 353 391

(ii) the deceleration between times $t = 3.0\,\text{s}$ and $t = 6.0\,\text{s}$.

deceleration = ...[2]

(c) **(i)** State what happens to the size of the deceleration after time $t = 6.0\,\text{s}$.

.....

.....[1]

(ii) State what happens to the resultant force on the skater after time $t = 6.0\,\text{s}$.

.....

.....[1]

[Total: 7]

© UCLES 2017

www.root19.com +91 - 9969 353 301

2 A footballer kicks a ball vertically upwards. Initially, the ball is stationary.

(a) His boot is in contact with the ball for 0.050 s. The average resultant force on the ball during this time is 180 N. The ball leaves his foot at 20 m / s.

Calculate

(i) the impulse of the force acting on the ball,

impulse = ...[2]

(ii) the mass of the ball,

mass = ...[2]

(iii) the height to which the ball rises. Ignore air resistance.

height = ...[3]

(b) While the boot is in contact with the ball, the ball is no longer spherical.

State the word used to describe the energy stored in the ball.

.....[1]

[Total: 8]

© UCLES 2017
www.root19.com

+91 - 9969 353 391

3 Fig. 3.1 shows remote sensing equipment on the surface of a distant planet.

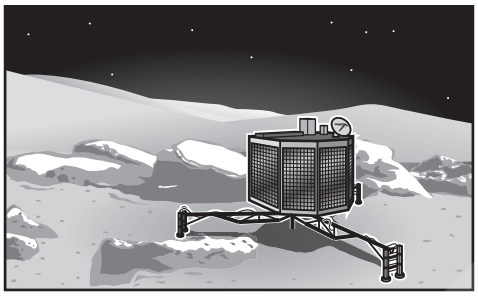

Fig. 3.1

(a) The mass of the equipment is 350 kg. The acceleration of free fall on the surface of this planet is 7.5 m / s^2.

(i) State what is meant by the term *weight*.

.....

.....[1]

(ii) Calculate the weight of the equipment on the planet.

weight = ...[2]

(b) The equipment releases a balloon from a point that is a small distance above the surface of the planet. The atmosphere at the surface of this planet has a density of 0.35 kg / m^3. The inflated balloon has a mass of 80 g and a volume of 0.30 m^3.

Make an appropriate calculation and then predict and explain the direction of any motion of the balloon. Show your working.

prediction .....

explanation .....

.....

[4]

[Total: 7]

www.root19.com +91 - 9969 353 301

4 **(a)** A 240 V, 60 W lamp is connected to a 240 V supply. The lamp has a constant temperature.

State

(i) the rate at which the lamp transfers energy to the surroundings,

rate = ...[1]

(ii) the names of the thermal processes by which the lamp transfers energy to the surroundings.

.....

.....[1]

(b) Fig. 4.1 shows a thick copper block that has been heated to 400 °C. One side of the block is dull black. The other side of the block is polished and shiny.

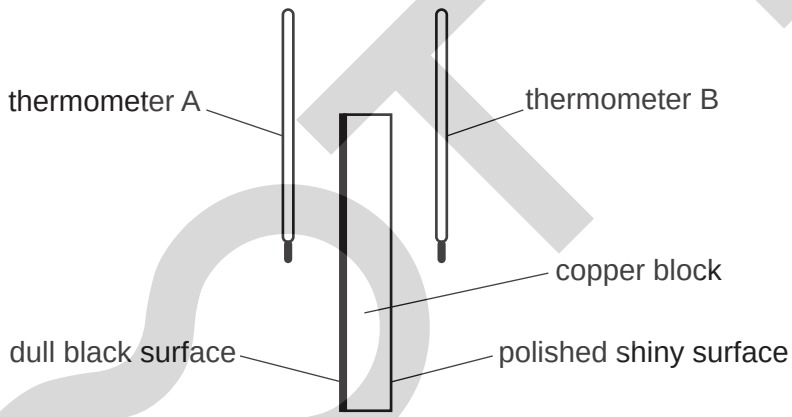

Fig. 4.1

(i) In Experiment 1, the thermometer bulbs are both painted black. They are placed at equal distances from the surfaces of the block. The maximum temperature shown by each thermometer is recorded.

Explain any difference between the maximum temperature shown by the two thermometers.

.....

.....

.....

.....[3]

www.root19.com +91 - 9969 353 391

(ii) In Experiment 2, the thermometer bulbs are both shiny silver-coloured. They are placed at the same distances from the surfaces of the block as in Experiment 1.

State and explain any differences that are observed in the maximum temperatures shown by the thermometers in Experiments 1 and 2.

.....

.....

.....

.....

.....[2]

(c) Fig. 4.2 shows a firefighter wearing shiny silver-coloured clothing.

Fig. 4.2

State the benefit to a firefighter of wearing shiny silver-coloured clothing.

.....

.....[1]

[Total: 8]

www.root19.com +91 - 9969 353 301

5 Fig. 5.1 shows some gas trapped in a metal cylinder by a piston.

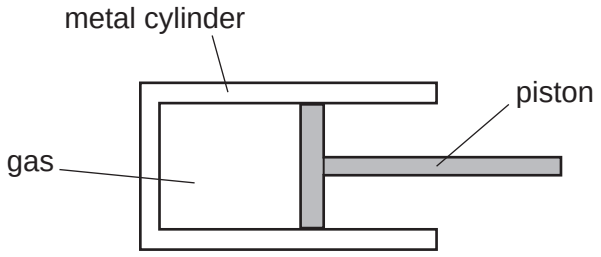

Fig. 5.1

(a) The position of the piston is fixed. The cylinder is moved from a cold room to a warm room.

Explain, in terms of molecules, what happens to the pressure of the gas in the cylinder.

.....

.....

.....

.....

.....

.....[4]

(b) The piston is now released. It moves to the right and finally stops.

Explain these observations in terms of the pressure and the volume of the gas in the cylinder.

.....

.....

.....

.....[2]

[Total: 6]

© UCLES 2017

www.root19.com
+91 - 9969 353 391

6 **(a)** A ray of light in glass is incident on a boundary with air.

State what happens to the ray when the angle of incidence of the ray is

(i) less than the critical angle of the glass,

.....[1]

(ii) greater than the critical angle of the glass.

.....[1]

(b) Fig. 6.1 shows a ray of light incident on a glass block at A. The critical angle of the glass is 41°.

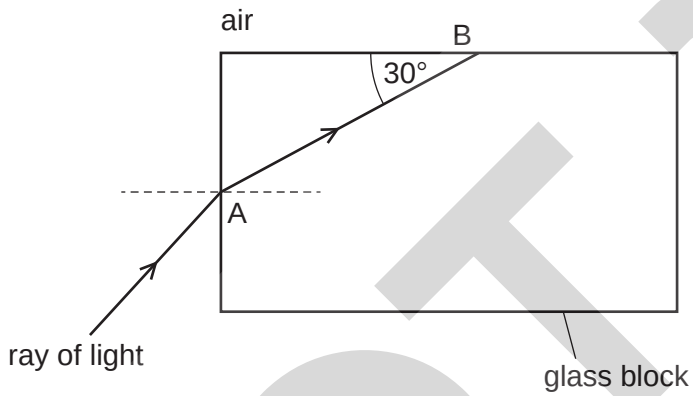

Fig. 6.1 (not to scale)

(i) On Fig. 6.1, without calculation, continue the ray from point B until it leaves the glass block. [2]

(ii) Calculate the refractive index of the glass.

refractive index = ...[2]

[Total: 6]

www.root19.com +91 - 9969 353 301

7 A loudspeaker produces a sound wave of constant frequency.

(a) State what is meant by *frequency*.

.....

.....[1]

(b) The sound wave travels in air towards a barrier with a small gap at its centre. Fig. 7.1 represents the compressions of the wave travelling towards the barrier.

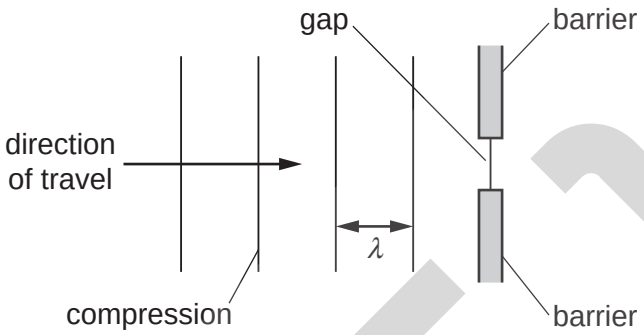

Fig. 7.1

(i) State what is meant by a *compression*.

.....[1]

(ii) The width of the gap is smaller than the wavelength λ of the wave.

On Fig. 7.1, draw the pattern of the compressions after the sound wave has passed through the gap. [2]

(iii) The barrier is adjusted so that the gap becomes wider.

Describe how this affects the pattern of the compressions after the sound wave has passed through the gap.

.....

.....

.....[1]

www.root19.com +91 - 9969 353 391

(c) The frequency of the sound wave is 6800 Hz. The speed of sound in air is 340 m / s.

(i) Calculate the wavelength of the sound wave in air.

wavelength = ...[2]

(ii) State a typical value for the speed of sound in a liquid.

.....[1]

[Total: 8]

© UCLES 2017

www.root19.com
+91 - 9969 353 301

8 A bar magnet is made of metal.

(a) Suggest a metal from which the bar magnet is made.

.....[1]

(b) Fig. 8.1 shows the bar magnet being inserted into a coil of wire. The N-pole and the S-pole of the bar magnet are marked.

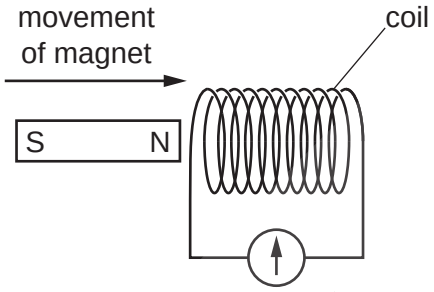

Fig. 8.1

The coil is connected to a galvanometer.

(i) Explain why the galvanometer deflects as the bar magnet is being inserted into the coil.

.....

.....

.....

.....[3]

(ii) Explain what determines the direction of the reading on the galvanometer.

.....

.....

.....[2]

(c) Describe a method for demagnetising a bar magnet.

.....

.....

.....[2]

[Total: 8]

© UCLES 2017
www.root19.com

+91 - 9969 353 391

9 **(a)** The resistance of a circuit component varies with the brightness of the light falling on its surface.

(i) State the name of the component.

.....[1]

(ii) Draw the circuit symbol for this component.

[1]

(b) Fig. 9.1 shows a 6.0 V battery connected in series with a 1.2 kΩ resistor and a thermistor.

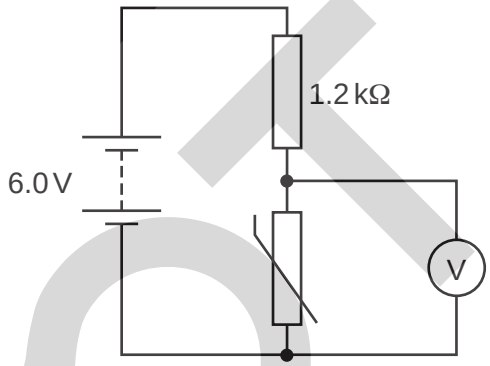

Fig. 9.1

(i) At a certain temperature, the resistance of the thermistor is 2.4 kΩ.

Calculate the reading on the voltmeter.

voltmeter reading = ...[4]

(ii) The battery connected to the circuit in Fig. 9.1 is not changed.

Suggest a change that would cause the reading of the voltmeter to decrease.

.....[1]

[Total: 7]

www.root19.com +91 - 9969 353 301

10 **(a)** Describe the movement of charge that causes an object to become positively charged.

.....[1]

(b) Fig. 10.1 shows a negatively charged rod held over an uncharged metal sphere.

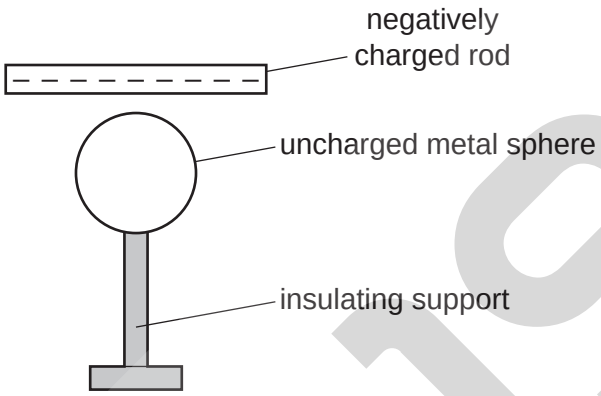

Fig. 10.1

(i) On Fig. 10.1, add + and – signs to represent the results of the movement of charge within the sphere. [2]

(ii) Describe the actions that must be taken to obtain an even distribution of positive charge on the surface of the sphere.

.....

.....

.....[2]

[Total: 5]

www.root19.com +91 - 9969 353 391

11 **(a)** A radioactive source is tested over a number of hours with a radiation detector. The readings are shown in Table 11.1.

Table 11.1

time / hours	0	1	2	3	4	5	6	7	8	9	10
detector reading / (counts / s)	324	96	39	23	21	17	21	20	19	20	18

Use the readings to suggest a value for the background count rate during the test, and to determine the half-life of the sample.

background count rate = ...

half-life of sample = ...

[4]

(b) Hydrogen-3 (tritium) has one proton and two neutrons. The nucleon number of tritium is three. It decays by emitting a β-particle.

Complete the nuclide equation to show this decay. The symbol X represents the nuclide produced by this decay.

$$^{\ldots}_{\ldots}\mathrm{H} \rightarrow {}^{\ldots}_{\ldots}\beta + {}^{\ldots}_{\ldots}\mathrm{X}$$

[3]

(c) The arrows in Fig. 11.1 show the paths of three α-particles moving towards gold nuclei in a thin foil.

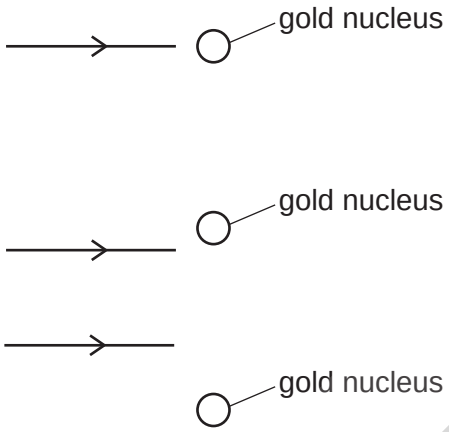

Fig. 11.1

On Fig. 11.1, complete the paths of the three α-particles. [3]

[Total: 10]

Permission to reproduce items where third-party owned material protected by copyright is included has been sought and cleared where possible. Every reasonable effort has been made by the publisher (UCLES) to trace copyright holders, but if any items requiring clearance have unwittingly been included, the publisher will be pleased to make amends at the earliest possible opportunity.

To avoid the issue of disclosure of answer-related information to candidates, all copyright acknowledgements are reproduced online in the Cambridge International Examinations Copyright Acknowledgements Booklet. This is produced for each series of examinations and is freely available to download at www.cie.org.uk after the live examination series.

Cambridge International Examinations is part of the Cambridge Assessment Group. Cambridge Assessment is the brand name of University of Cambridge Local Examinations Syndicate (UCLES), which is itself a department of the University of Cambridge.